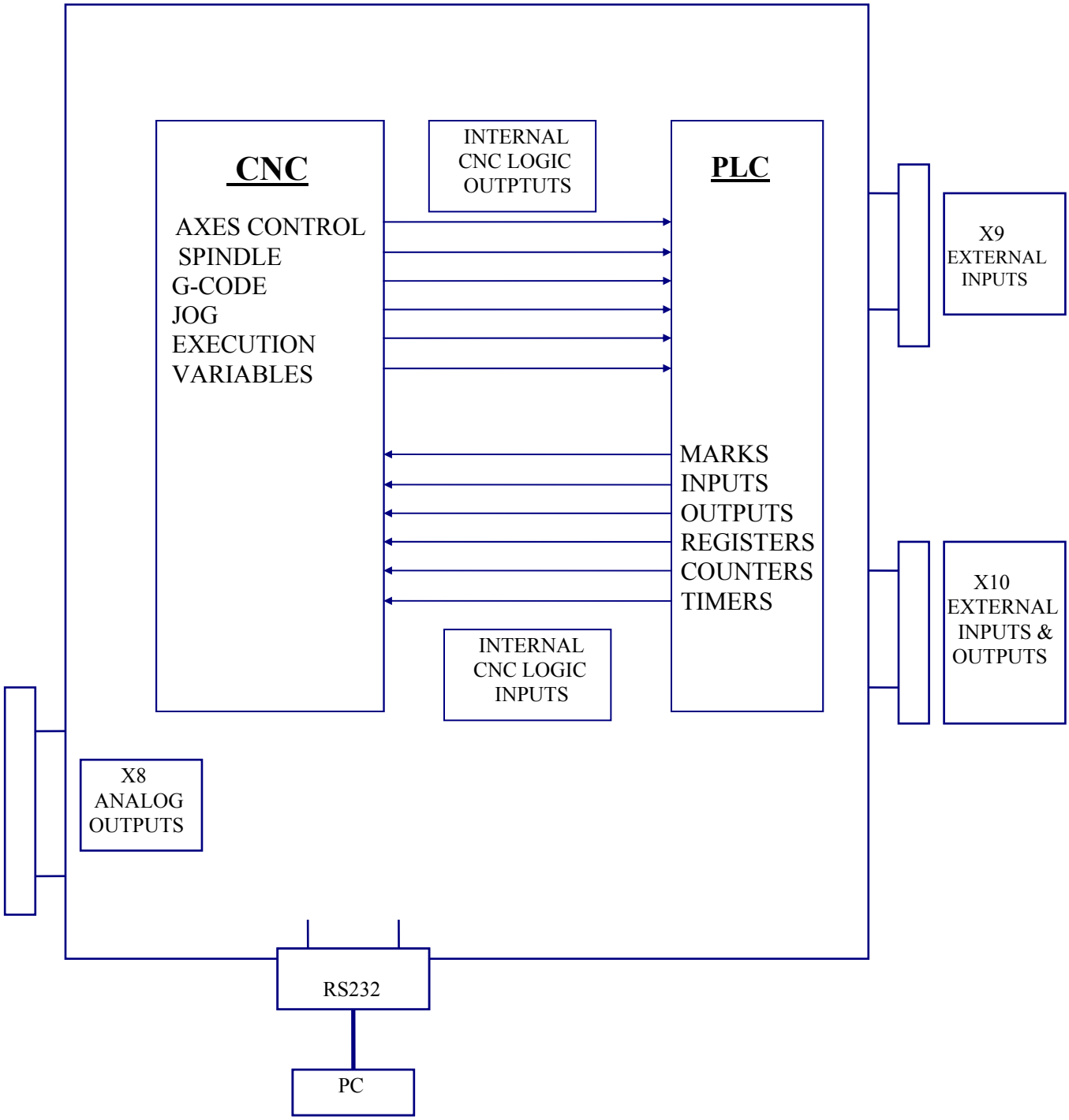8050/55 CNC--PLC DATA EXCHANGE